Airo International Research Journal
Peer Reviewed Multidisciplinary Indexed Journal
ISSN: 2320-3714
Volume:13 Issue:2 February 2018 UGC Approval Number 63012

Wire electrical discharge machining (WEDM) process using taguchi method: Parametric optimization

Research scholar

Premsagar patil

Mechanical Engineering

ABSTRACT

Wire electrical discharge machining (WEDM) is a particular warm machining measure able to do precisely machining portions of hard materials with complex shapes. Parts having sharp edges that present troubles to be machined by the standard machining cycles can be effectively machined by WEDM measure. Innovation of the WEDM cycle depends on the ordinary EDM starting wonder using the broadly acknowledged non-contact strategy of material evacuation with a distinction that sparkle is produced at wire and work piece hole. Since the presentation of the cycle, WEDM has developed as straightforward methods for making apparatuses and bites the dust to the best option of creating small size leaves behind the most significant level of dimensional precision and surface completion. This paper traces the advancement of a model and its application to enhance WEDM machining boundaries. Trials are directed to test the model and palatable outcomes are acquired. The procedure depicted here is relied upon to be exceptionally useful to assembling businesses, and furthermore different territories, for example, aviation, vehicle and apparatus making enterprises.

Keywords: WEDM, metal removal rate, surface finish, taguchi method, genetic algorithm

Introduction

Electrical discharge machining (EDM) is a non-customary, thermo-electrical cycle, which dissolves materials from the work piece by a progression of discrete flashes between the work and device terminal drenched in a fluid dielectric medium. These electrical discharges liquefy and disintegrate minute measures of the work material, which are then catapulted and flushed away by the dielectric. A wire EDM creates sparkle discharges between a little wire terminal and a work piece with de-ionized water as the dielectric medium and dissolves the work piece to deliver complex two and three dimensional shapes as indicated by a mathematically controlled (NC) way. The primary objectives of WEDM makers and clients are to accomplish a superior dependability and higher profitability of the WEDM cycle. As more current and more extraordinary materials are created, and more perplexing shapes are introduced, ordinary machining tasks will keep on arriving at their restrictions and the expanded utilization of the WEDM in assembling will keep on developing at a quickened rate (Guitrau, 1991). Wire electrical discharge machining makers and clients underscore on accomplishment of higher machining efficiency with an ideal exactness and surface completion. Nonetheless, because of countless factors even a profoundly gifted administrator with a best in class WEDM is once in a while ready to accomplish the ideal exhibition (Williams and Rajurkar, 1991). A successful method to tackle this issue is to decide the connection between the presentation proportions of the cycle and its controllable info boundaries.

Examinations concerning the impacts of machining input boundaries on the presentation of WEDM have been generally detailed (Rajurkar and Royo, 1989 Williams and Rajurkar 1991, Sone and Masui, 1991, Matsuo and Oshima, 1992, Soni and Chakraverti, 1994). A few endeavors have been made to create numerical model of the cycle by Scott, Boyina and Rajurkar (1991), Indurkhya and Rajurkar (1992), and Rajurkar and Wang (1993). In these reports, profitability of the cycle and the surface unpleasantness of the machined work piece are utilized as proportions of the cycle execution. Neural organization models on material evacuation rate in EDM has been concentrated by Tsai and Wang (2001) while Lee and Li (2001) focused on

impacts of cycle boundaries in EDM utilizing tungsten carbide as work material. Hocheng et al. (1997) researched the connection among's ebb and flow and flash on-time with the cavity size created by a solitary sparkle of SiC/Al work materials. Qu et al. (2002) have, through assessment of writing, reasoned that exploration has not been coordinated towards EDM applications in the territory of recently created designing materials and the limits that limit the material expulsion rate (MRR). Thus, examinations were completed to consider the impact of flash on-time span and sparkle on-time proportion, two significant EDM measure boundaries, on a superficial level completion attributes and respectability of the four kinds of cutting edge designing material, for example, permeable metal froths, metal bond jewel granulating wheels, sintered Nd-Fe-B magnets, and carbon-carbon bipolar plates. Scott, Boyina and Rajurkar (1991), utilized a factorial plan strategy, to decide the ideal blend of control boundaries in WEDM considering the proportions of machining execution as metal evacuation rate and the surface completion. The examination presumes that discharge current, the beat term and the beat recurrence are huge control factors. Tarng and Chung (1995) utilized a neural organization model to gauge cutting pace and surface complete the process of utilizing input settings as heartbeat term, beat stretch, top flow, open circuit voltage, servo reference voltage, electric capacitance and table speed. Trezise (1982) recommends that crucial cutoff points on machining precision are dimensional consistency of the wire and the positional exactness of the work table. Nonetheless, different components scheme to keep this hypothetical accuracy from being accomplished. The vast majority of the vulnerabilities emerge on account of the wire distant from the aides.

Airo International Research Journal
Peer Reviewed Multidisciplinary Indexed Journal
ISSN: 2320-3714
Volume:13 Issue:2 February 2018 UGC Approval Number 63012

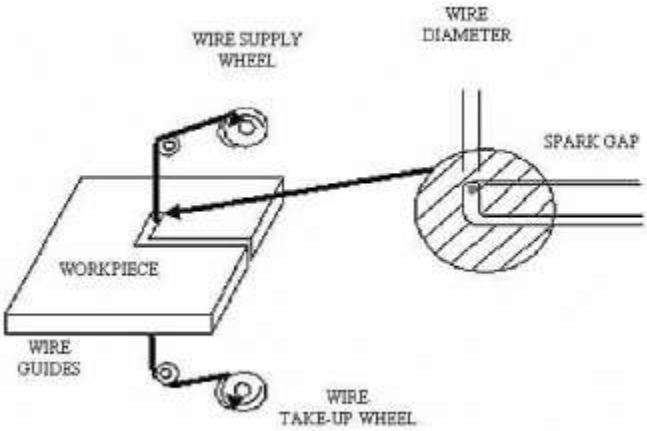

The main exhibition gauges in WEDM are metal evacuation rate, work piece surface completion, and cutting width. Discharge flow, beat length, beat recurrence, wire speed, wire pressure, dielectric stream rate are the machining boundaries which influence the presentation measures. The hole among wire and work piece as a rule goes from 0.025 to 0.075 mm and is continually kept up by a PC controlled situating framework. The material evacuation rate (g/min) is determined by weight contrast of the examples when machining. The surface completion esteem (µm) is acquired by estimating the mean total deviation, Ra, from the normal surface level. In WEDM activities, material evacuation rate decide the financial matters of machining and pace of creation. In setting the machining boundary, the principle objective is to augment MRR and SF (surface completion). To examine the impacts of different cycle boundaries on MRR and SF and afterward to recommend the ideal cycle settings, factually planned analyses are utilized in this investigation. By and large, the machine apparatus manufacturer gives machining boundary table to be utilized for setting machining boundary. This cycle depends vigorously on the experience of the administrator. By and by, it makes hard to use the ideal elements of a machine attributable to there being such a large number of customizable machining boundaries. The Taguchi technique, a ground-breaking exploratory plan device, utilizes straightforward, powerful, and efficient methodology for determining of the ideal machining boundaries. Further, this methodology requires least test cost and proficiently decreases the impact of the wellspring of

Airo International Research Journal
Peer Reviewed Multidisciplinary Indexed Journal
ISSN: 2320-3714
Volume:13 Issue:2 February 2018 UGC Approval Number 63012

variety. A reasonable and simple to work procedure must be advanced to change the machined surfaces just as look after precision. The system utilizes Taguchi's test plan for setting appropriate machining boundaries to viably control the measure of eliminated materials and to deliver confounded exact segments.

The WEDM cycle by and large comprises of a few phases, an unpleasant cut stage, a harsh cut with completing stage, and a completing stage. During the harsh cut stage metal expulsion rate is of essential significance. Just during the harsh cut with completing stage are metal evacuation rate and surface completion both of essential significance. This implies that the unpleasant cut with completing stage is the most testing stage since two objectives should at the same time be thought of. We will along these lines consider the harsh cut with completing stage here:

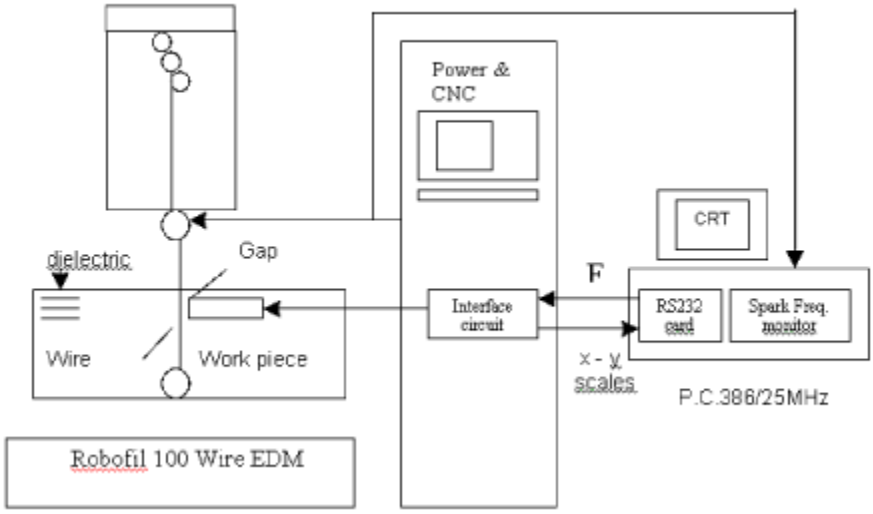

Material, Test Conditions, and Measurement

The experimental studies were performed on a Robofil 100 WEDM machine tool. Settings of control parameters of the machine are listed as Table 1. Few other factors, which can be expected to have an effect on the measures of performance, are also listed in Table 1. In order to minimize their effects, these factors were held constant as for as practicable. The control factors were

chosen based on review of literature, experience, and some preliminary investigations. Different settings of six controllable factors such as discharge current, pulse duration, pulse frequency, wire speed, wire tension, and dielectric flow rate were used in the experiments as shown in Table 2 whereas pulse interval time and table feed rate were kept constant throughout the experiment. Zinc coated copper wire with 0.25 mm diameter was used in the experiment. Each time the experiment was performed, a particular set of input parameters was chosen and the work piece, a block of D2 tool steel (1.5%C, 12%Cr, 0.6%V, 1%Mo, 0.6%Si, 0.6%Mn and balance Fe), was cut completely through 10 mm length of the cut. The gap between wire and work piece usually ranges from 0.025 to 0.075 mm and is constantly maintained by a computer controlled positioning system. The most important performance measures in WEDM are metal removal rate, and work piece surface finish. The material removal rate (g/min) was calculated by weight difference of the specimens before and after machining, using a type E-12005 sartorius precision scale (maximum capacity =1210g, precision = 0.001g). The surface finish value (µm) was obtained by measuring the mean absolute deviation from the average surface level using a type C3A Mahr Perthen Perthometer (stylus radius of 5 µm). In this investigation, the height of the work piece was chosen to be 25 mm so that the cross-section of the cut made was 10 mm ´ 25 mm. A 0.25 mm diameter stratified wire (zinc coated copper wire) with vertical configuration was used.

Airo International Research Journal
Peer Reviewed Multidisciplinary Indexed Journal
ISSN: 2320-3714
Volume:13 Issue:2 February 2018 UGC Approval Number 63012

Table 1. Parameters of Robofil 100 WEDM.

Control Factors	Symbols	Fixed Parameters	
Discharge Current	Factor A	Wire	Zinc coated copper wire
Pulse Duration	Factor B	Shape	Rectangular product
Pulse Frequency	Factor C	Location of work piece on working table	At the center of the table
Wire Speed	Factor D	Angle of cut	Vertical
Wire Tension	Factor E	Thickness of work piece	10 mm
Dielectric Flow Rate	Factor F	Stability	Servo control
		Height of work piece	25 mm
		Wire type	Stratified, copper, diameter 0.25 mm

Table 2. Levels for Various Control Factors.

	Level			
Control Factor	I	II	III	Unit
A. Discharge Current	16.00	24.00	32.00	amp
B. Pulse Duration	3.20	6.40	12.80	µsec
C. Pulse Frequency	40.00	50.00	60.00	KHz
D. Wire Speed	7.60	8.60	9.20	m/min
E. Wire Tension	1000.00	1100.00	1200.00	g
F. Dielectric Flow Rate	1.20	1.30	1.40	Bars

Plan of Experiment dependent on Taguchi Method

By utilizing Robofil 100 WEDM, the information boundaries are to be looked over a restricted arrangement of potential qualities. The estimations of info boundaries which are of interest in the unpleasant cut with completing stage are recorded. To assess the impacts of machining boundaries on execution attributes (MRR and SF), and to recognize the exhibition qualities under the ideal machining boundaries, an exceptionally planned exploratory technique is required.

Airo International Research Journal
Peer Reviewed Multidisciplinary Indexed Journal
ISSN: 2320-3714
Volume:13 Issue:2 February 2018 UGC Approval Number 63012

Traditional exploratory plan techniques are excessively mind boggling and hard to utilize. Furthermore, huge quantities of examinations must be done when number of machining boundaries increments. Hence, Taguchi strategy, an incredible asset for boundary configuration, was utilized to decide ideal machining boundaries for greatest MRR and SF in WEDM. The control factors are utilized to choose the best conditions for strength in plan of assembling measure, while the commotion factors mean all factors that cause variety. Taguchi proposed to secure the trademark information by utilizing symmetrical exhibits, and to examine the presentation measure from the information to choose the ideal cycle boundaries. In this work, it is intended to contemplate the conduct of six control factors viz., A, B, C, D, E, and F and two cooperations viz.,

A×B and A×F, in light of past experience and broad writing audit. The trial perceptions are additionally changed into a sign to-commotion (S/N) proportion. There are a few (S/N) proportions accessible relying upon goal of advancement of the reaction. The trademark with higher worth speaks to better machining execution, for example, MRR, is called 'higher is better, HB'. Contrarily, the trademark that has lower esteem speaks to better machining execution, for example, SF. Accordingly, "HB" for the MRR, and "LB" for the SF were chosen for acquiring ideal machining execution qualities. The misfortune work (L) for target of HB and LB is characterized as follows, where and speak to reaction for metal evacuation rate and surface completion separately and 'n' signifies the quantity of analyses.

$$L_{HB} = \frac{1}{n}\sum_{i=1}^{n}\frac{1}{y_{MRR}^{2}}$$

$$L_{LB} = \frac{1}{n}\sum_{i=1}^{n} y_{SF}^{2}$$

The S/N ratio can be calculated as a logarithmic transformation of the loss function as shown below.

Airo International Research Journal
Peer Reviewed Multidisciplinary Indexed Journal
ISSN: 2320-3714
Volume:13 Issue:2 February 2018 UGC Approval Number 63012

S/N ratio for MRR= $-10\log_{10}(L_{HB})$

S/N ratio for SF = $-10\log_{10}(L_{LB})$

The standard direct diagram is changed utilizing line division technique, as appeared, to allot the elements and collaborations to different sections of the symmetrical exhibit (Glen, 1993, Madhav, 1989) The cluster picked was the L27 (313) which have 27 lines relating to the quantity of analyses with 13 segments at three levels. The components and their cooperation are alloted to the segments utilizing changed straight diagram. The arrangement of examinations is as per the following: the primary segment was allocated to discharge flow (A), the subsequent section to beat span (B), the eighth segment to beat recurrence (C), the ninth segment to wire speed (D), the 10th segment to wire pressure (E), the fifth segment to dielectric stream rate (F), the third and fourth segments are doled out to A×B for assessing association between discharge flow (A) and beat term (B) separately, The 6th and seventh segments are relegated to A×F for assessing cooperation between discharge flow (A) and dielectric stream rate (F) individually.

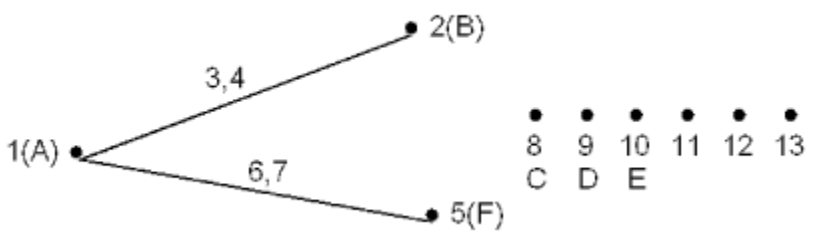

Confirmation Experiment

The confirmation try is the last advance in any plan of investigation measure. The reason for the confirmation analyze is to approve the ends drawn during the investigation stage. The confirmation try is performed by directing a test with explicit mix of the elements and levels recently assessed. In this examination, another trial was planned with mixes of control factors

Airo International Research Journal
Peer Reviewed Multidisciplinary Indexed Journal
ISSN: 2320-3714
Volume:13 Issue:2 February 2018 UGC Approval Number 63012

A2, B3 and F3 to acquire MRR. An investigation was directed with new mix of elements and the outcome was noted down. The assessed S/N proportion is determined with the assistance of the forecast condition demonstrated as follows:

$$\hat{\eta}_1 = \overline{T} + \left(\overline{A}_2 - \overline{T}\right) + \left(\overline{B}_3 - \overline{T}\right) + \left(\overline{A}_2\overline{B}_3 - \overline{T}\right) - \left[\left(\overline{A}_2 - \overline{T}\right) - \left(\overline{B}_3 - \overline{T}\right)\right] + \left(\overline{F}_3 - \overline{T}\right)\left[\left(\overline{A}_2\overline{F}_3 - \overline{T}\right) - \left(\overline{A}_2 - \overline{T}\right) - \left(\overline{F}_3 - \overline{T}\right)\right]$$

$$\hat{\eta}_1 = \overline{A}_2\overline{B}_3 - \overline{A}_2 + \overline{A}_2\overline{F}_3$$

Substituting values from response table and interaction matrix for MRR, $\hat{\eta}_1$ is estimated as

$$\hat{\eta}_1 = -15.5558 \ db$$

The estimated S/N ratio for SF can be calculated with the help of the following prediction equation for new combinations A_1, B_2 and F_2.

$$\hat{\eta}_2 = \overline{T} + \left(\overline{A}_1 - \overline{T}\right) + \left(\overline{B}_2 - \overline{T}\right) + \left[\left(\overline{A}_1\overline{B}_2 - \overline{T}\right) - \left(\overline{A}_1 - \overline{T}\right) - \left(\overline{B}_2 - \overline{T}\right)\right] + \left(\overline{F}_2 - \overline{T}\right) + \left(\overline{A}_1\overline{F}_2 - \overline{T}\right) - \left(\overline{A}_1 - \overline{T}\right) - \left(\overline{F}_2 - \overline{T}\right)\Big]$$

$\hat{\eta}_2$ Predicted Average

$\overline{T}$ Overall experimental average

$\overline{A}_1$, $\overline{B}_2$ and $\overline{F}_2$ Mean response for factor and interactions at designated levels

$$\hat{\eta}_2 = \overline{A}_1\overline{B}_2 - \overline{A}_1 + \overline{A}_1\overline{F}_2$$
$$\eta_2 = 88.4731 db$$

Airo International Research Journal
Peer Reviewed Multidisciplinary Indexed Journal
ISSN: 2320-3714
Volume:13 Issue:2 February 2018 UGC Approval Number 63012

The correlation of the anticipated an incentive with the new trial esteem for the chose mixes of the machining boundaries. As appeared in these tables, the test esteems concur sensibly well with forecasts in light of the fact that a mistake of 4.062 % for the S/N proportion of MRR and 1.53 % for the S/N proportion SF is seen when anticipated outcomes are contrasted and test esteems. Henceforth, the exploratory outcome affirms the advancement of the machining boundaries utilizing Taguchi strategy for upgrading the machining execution. The subsequent model is by all accounts fit for foreseeing both the MRR and SF to a sensible exactness. Be that as it may, the mistake in MRR can be additionally expected to decrease if the quantity of estimations is expanded.

Multi-objective Optimization of WEDM Parameters

In this investigation, primary target is to infer machining boundary settings for augmentation of MRR and SF. The multi-target advancement requires quantitative assurance of the connection between the metal expulsion rate and surface gets done with blend of machine setting boundaries. To communicate, metal expulsion rate and surface completion as far as machining boundary settings, a numerical model in the accompanying structure is recommended.

$$Y = K_0 + K1 \times A + K_2 \times B + K_3 \times F + K_4 \times A \times B + \\ + K_5 \times A \times F$$

Here, Y is the performance output terms and K_i (i = 0,1 .5) are the model constants. The constant are calculated using non-linear regression analysis with the help of MINITAB 14 software and the following relations are obtained.

$$MRR = 1.011 - 0.580 \times A + 0.362 \times \mathbf{B} - 0.659 \times F - \\ -0.371 \times A \times B + 1.046 \times A \times F \quad r^2 = 0.98 \qquad ($$

$$SF = 0.927 - 0.001 \times A + 0.095 \times B - 0.066 \times F - 0.031 \times A \times B + 0.081 \times A \times F \\ r^2 = 0.99 \qquad ($$

Airo International Research Journal
Peer Reviewed Multidisciplinary Indexed Journal
ISSN: 2320-3714
Volume:13 Issue:2 February 2018 UGC Approval Number 63012

The accuracy of the determined constants is affirmed as high relationship coefficients (r2) in the tune of 0.9 are gotten and thusly, the models are very appropriate to use for additional investigation. A weighting technique is followed to appoint loads to execution yields in the multi-target advancement work. To beat the enormous contrasts in mathematical qualities between two unique articles, for example, MRR and SF, the capacity relating to each machining execution yield is standardized. The weighting strategy empowers to communicate standardized execution yield of MRR and SF as a solitary target. Here, the resultant weighted target capacity to be expanded is given as:

$$\text{Maximize} \quad Z = (w_1 \times f1 + w_2 \times 1/f_2) \times (1 - K \times C)$$

$$A_{min} \leq A \leq A_{max}$$

$$B_{min} \leq B \leq B_{max}$$

$$F_{min} \leq F \leq F_{max}$$

Genetic calculation (GA) is utilized to get the ideal machining boundaries for multi-target yields by utilizing the few mixes of the weight. The estimations of the loads are relegated haphazardly so that their entirety should be equivalent to one. The bigger the weighting factor, more prominent improvement in relating machining execution yield can be accomplished. To streamline the multi-target work, the GA boundaries are summed up in Table 9. The computational calculation is executed in Turbo C++ code and run on an IBM Pentium IV machine. Genetic calculations (GAs) are numerical advancement methods that recreate a characteristic development measure. They depend on the Darwinian Theory, wherein the fittest species endures and proliferate while the less fruitful will in general vanish. The idea of genetic calculation depends on the development cycle and was presented by Holland (1975). Genetic calculation primarily relies upon three sorts of administrator's viz., generation, hybrid and transformation. Multiplication is refined by replicating the best people starting with one age then onto the next, in what is frequently called an elitist procedure. The best arrangement is

monotonically improving starting with one age then onto the next. They chose guardians are submitted to the hybrid administrator to create a couple of youngsters. The hybrid is completed with an alloted likelihood, which is commonly rather high. On the off chance that a number haphazardly inspected is sub-par compared to the likelihood, the hybrid is performed. The genetic change presents variety in the populace by an intermittent arbitrary substitution of the people. The change is performed dependent on an appointed likelihood. An irregular number is utilized to decide whether another individual will be delivered to substitute the one produced by hybrid. The change technique comprises of supplanting one of the choice variable estimations of an individual, while keeping the leftover factors unaltered. The supplanted variable is arbitrarily picked, and its new worth is determined by haphazardly inspecting inside its particular reach.

Population size	50
Maximum number of generation	500
Number of problem variables	3
Probability of crossover	75%
Probability of mutation	5%

Conclusions

In this work, it is planned to contemplate factors like discharge flow, beat span, beat recurrence, wire speed, wire pressure and dielectric stream rate and hardly any chose communications both for expansions of MRR and minimization of surface unpleasantness in WEDM measure utilizing Taguchi Method. The investigation shows that components like discharge flow (A), beat term (B), dielectric stream rate (F) and associations AxB and AxF have been found to assume critical part in cutting activities. Investigation of the outcomes prompts infer that factors at level A2, B2 and F3 can be set for augmentation of MRR. Additionally, it is prescribed to utilize the elements

at levels, for example, A1, B1 and F3 for augmentation of SF. In any cycle, scarcely any communications assume crucial function in characterizing the ideal presentation measures. An examination without considering cooperation impacts appears to need profundity investigation. Thus, in this investigation, the factors as well as hardly any chose cooperations have been thought of. The aftereffects of confirmation explore concur well the anticipated ideal settings as a blunder of 4.062 % is found with MRR. Essentially, a mistake of 1.53 % was noticed for SF. It is normal that blunders can be decreased if more number of replications are taken during exploratory stage. It is to be noticed that the ideal degrees of the variables for both the destinations vary generally. To advance for both the goals, numerical models are created utilizing non-direct relapse strategy. The ideal inquiry of machining boundary esteems for the goal of amplifying both MRR and SF are defined as a multi-objective, multi-variable, non-straight enhancement issue. This investigation additionally assesses the presentation measures with equivalent significance to weighting factors, since high MRR and high SF are similarly significant goals in WEDM application. The reasoning behind the utilization of genetic calculation lies in the way that genetic calculation has the ability to locate the worldwide ideal boundaries though the customary enhancement strategies are typically condescending at the neighborhood ideal qualities. The calculation is tried to discover ideal estimations of boundaries fluctuating weighting factors for various goals. In future, the investigation can be broadened utilizing multiple goals, diverse work materials, and cross breed enhancement procedures.

References

Guitrau, E.B., 1991, "Wire EDM-An Overview of Technology and Trends", SME Technical Paper, MR 91-519.

Glen, Stuart Peace., 1993, "Taguchi Methods: A Hands on Approach", Addison-Wesley, New York, pp. 273-311.

Hocheng, H., Lei, W.T., and Hsu, H.S., 1997, "Preliminary Study of Material Removal in Electrical-discharge Machining of SiC/Al", Journal of Materials Processing Technology, Vol.63, pp. 813-818.

Holland J H., 1975, "Adaptation in Natural and Artificial Systems", The University of Michigan Press, Ann Arbor, Michigan.

Indurkhya, G., and Rajurkar, K.P., 1992, "Artificial Neural Network Approach in Modeling of EDM Process", Proceedings of Artificial Neural Networks in Engineering (ANNIE' 92) Conference, St.Louis, Missouri, U.S.A., 15-18 November, pp. 845-890.

Lee, S.H., and Li, X., 2001, "Study of the Effect of Machining Parameters on the Machining Characteristics in Electrical Discharge Machining of Tungsten Carbide", Journal of Materials Processing Technology, Vol. 115, pp. 334-358.ol. 115, pp. 334-358.

Matsuo, T., Oshima, E., 1992, "Investigation on the Optimum Content and Machining Condition for Wire EDM of Zirconia Ceramics", Ann. CIRP, Vol. 41, pp. 231-234.

Phadke, Madhav S., 1989, Quality Engineering using Robust Design, Prectice-Hall, Englewood Cliffs, New Jersey, USA.

Qu, J., Shih, A.J., Scattergood, R.O., 2002, "Development of the Cylindrical Wire Electrical Discharge Machining Process: Part I: Concept, Design, and Material Removal Rate", ASME Journal of Manufacturing Science and Engineering, Vol. 124, pp. 702-707.

Qu, J., Shih, A.J., Scattergood, R.O., 2002, "Development of the Cylindrical Wire Electrical Discharge Machining Process: Part II: Surface Integrity and Roundness", ASME Journal of Manufacturing Science and Engineering, Vol.124, pp. 708-714.

Rajurkar, K.P., Royo, G.F., R.F., 1989, "Effect of Control and Orbital Motion on Surface Integrity of EDM components", Journal of Mechanical Working Technology, Vol.20, pp. 341-352.

Rajurkar, K.P., Wang, W.M., 1993, "Thermal Modeling and On-line Monitoring of Wire-EDM", Journal of Materials Processing Technology, Vol. 38, No.1-2, pp. 417-430.

Scott, D, Boyina, S., Rajurkar, K.P., 1991, "Analysis and Optimization of Parameter Combination in Wire Electrical Discharge Machining", International Journal of Production Research, Vol. 29, No. 11, pp. 2189-2207.

Sone, T., Masui, K., 1991, "Application of Ion Nitriding to Wire-Electrical-Discharge-Machined Blanking Dies", Material Science and Engineering, Vol. 140, pp. 486-493.

Soni, J.S., Chakraverti, G., 1994, "Machining Characteristics of Titanium with Rotary Electro-Discharge Machining", Wear, Vol. 171, pp. 51-58.

Tarng, Y.S., Ma, S.C., Chung, L.K., 1995, "Determination of Optimal Cutting Parameters in Wire Electrical Discharge Machining", International Journal of Machine Tools and Manufacture, Vol. 35, No. 129, pp.1693-1701.

Tasi, K., Wang, P., 2001, "Comparison of Neural Network Models on Material Removal Rate in Electrical Discharge Machining", Journal of Materials Processing Technology, Vol. 117, pp. 111-124.

Trezise, K.E., 1982, "A Physicist's View of Wire EDM", Proceedings of the International Conference on Machine Tool Design and Research, Vol. 23, pp 413-419.

Williams, R.E., Rajurkar, K.P., 1991, "Study of Wire Electrical Discharge Machining Surface Characteristics", Journal of Materials Processing Technology, Vol. 28, pp.486-493.